OLIGHT

USER MANUAL

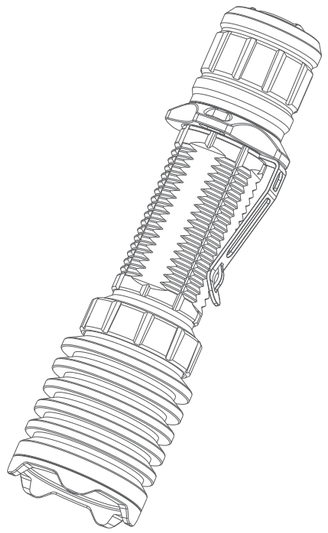

Warrior X Pro

Thank you for purchasing this Olight Product. Please read this manual carefully before use and keep it for future reference!

IN THE BOX

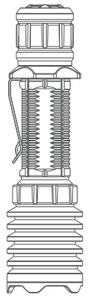

Warrior X Pro
(with Battery)

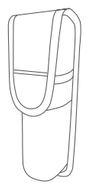

Holster

TGR
(Tactical Grip Ring)

USB Magnetic
Charging Cable

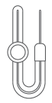

Lanyard

SPECIFICATIONS

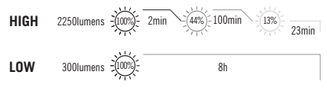

All above specifications are test results based on ANSI/NEMA FL1-2009 Standard. The tests are performed using the battery included in the flashlight.

Note: The maximum output brightness will decrease as the battery voltage decreases.

USB MAGNETIC CHARGING CABLE -- MCC3

Parameters	Specification
Charge cable	USB type A - magnetic charge connector, length: 0.5m
Input	USB A - Type DC 5V 2A
Charging pattern	CC&CV
Maximum charging current	2A
Full-charged voltage	4.2V±0.05V
Charge indication	Red: charging Green: full (over 95%) or disconnect with flashlight
Full-charged time	5.5 hours (For reference only. When the USB power supply is insufficient to provide 5V 2A power capacity, the charging time will be longer)

PRODUCT OVERVIEW

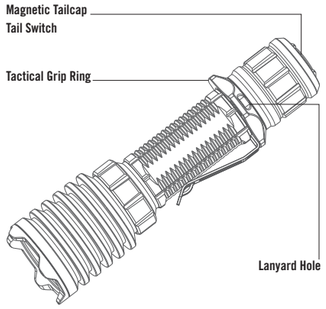

BATTERY INSTALLATION

Before first use, unscrew the tailcap and remove the insulating film within the battery compartment before screwing the tailcap back on tightly. If the battery needs to be changed, make sure that the positive polarity side of the battery faces toward the direction of the flashlight head (the side of the LED).

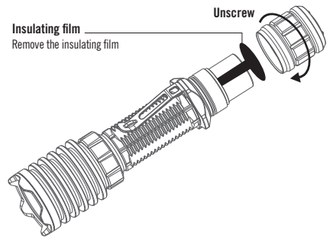

CHARGING

Vibrating Power Indicator

It helps to alert if the battery is low (power≤30% vibrate once every 5 minutes; power≤10% vibrate once per minute; power≤5% vibrate once every 10 seconds).

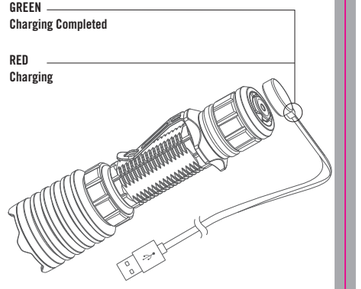

* Before first use please fully charge the product.
* Connect the magnetic USB end of the charging cable (MCC3) to an external USB power source, then attach the other end of the magnetic charging cable to the charging port (best charging efficiency with more than 10W (5V 2A) USB power source). The red indicator means charging, green indicator means charging completed (battery power＞95%).
* Only charge with standard MCC3, not compatiable with other MCC.

TGR (Tactical Grip Ring) Installation Guide

a. Unscrew the tailcap and remove the O-ring.

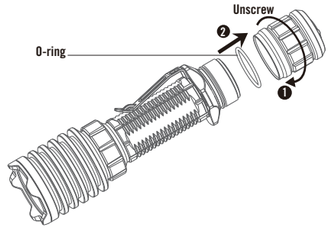

b. Then remove the tactical grip ring and pocket clip.

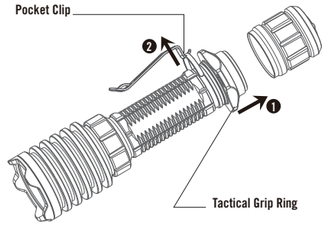

C. Install the TGR and O-ring as shown in the picture and tighten the tailcap.

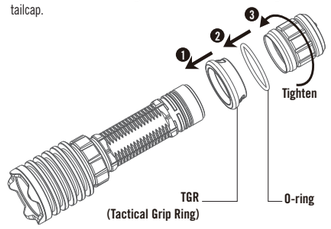

DANGER

- DO NOT throw the light directly into human eyes. This may cause temporary blindness, or permanent damage to the eyes.
- DO NOT cover the light head when the flashlight is on, or place the flashlight head on the ground. The radiation energy of the flashlight may cause damage to the flashlight itself, or even result in burning to flammable objects.
- DO NOT use Non-protected rechargeable batteries.

WARNING

- Keep out of reach of children.
- DO NOT activate high mode repeatedly under high temperature to prevent the flashlight body from overheating and hurting the user's hand.
- The tail switch may not work while immersed in sea water or other conductive media. Please try to keep it clean and dry.
- If the product is left unused or carried and transported, please loosen the tailcap a half turn to aviod accidentally activating the flashlight.

NOTICE

- DO NOT short circuit the switch cap with the ring outside it for a prolonged period. The short circuit in this case will result in a loss of current below 3mA, and may lead to a complete battery drain if it is in this state for too long.

CONTENTS

(EN) English ____ 01
(CHS) 简体中文 ____ 01
(FI) Finnish ____ 01
(NO) Norwegian ____ 01
(SV) Swedish ____ 01
(NED) Nederland ____ 02
(PL) Polska ____ 02
(DE) Deutsch ____ 02
(HU) Magyarország ____ 02
(RU) Русский ____ 03
(ES) Español ____ 03
(RO) Romanesc ____ 03
(UA) Ukrainian ____ 03
(JP) 日本語 ____ 04
(TH) ไทย ____ 04
(FR) Français ____ 04
(BG) български ____ 04
(IT) Italia ____ 04
(SK) Slovenskýjazyk ____ 05

(EN) English

HOW TO OPERATE

Click the tail switch lightly to produce a low light output or press the tail switch hard to produce a high light output.

Single click (click and release quickly) the tail switch to turn the flashlight on or off.

When you press and hold the switch, the flashlight will be in momentary mode; when you release the tail switch, it will turn off.

(CHS) 简体中文

如何操作手电

轻按输出低亮档，重按输出高亮档;

单按（按下并快速释放）开启或关闭手电；

长按并保持，手电开启，按键释放时手电同步关闭。

(FI) Finnish

VALAISIMEN KÄYTTÖ

Käytä alhaista valotehoa painamalla kytkintä kevyesti ja korkeaa valotehoa painamalla kytkintä kovaa.

Kytke valaisin päälle ja pois päältä painamalla kytkintä kerran lyhyesti.

Käytä valaisinta hetkellisesti pitämällä kytkintä käytön ajan painettuna. Valo sammuu kun kytkin vapautetaan.

(NO) Norwegian

HVORDAN BRUKE

Klikk lett på bryteren for å produsere et svakt lys, eller trykk hardt på bryteren for høy lyseffekt.

Enkelt klikk (klikk og slipp raskt) på bryteren for å slå lommelykten av eller på.

Når du trykker og holder inne bryteren, vil lommelykten være i øyeblikkelig modus, når du slipper bryteren, vil den slå seg av.

(SV) Swedish

BYTA EFFEKTLÄGE

Klicka på knappen lätt och lampan kommer lysa med svag styrka eller klicka på knappen hårt för att lampan ska lysa med hög ljusstyrka.

Klicka en gång (tryck släpp snabbt) på knappen för att tända/släcka lampan.

När du klickar och håller ned knappen, kommer lampan tändas momentant, när du släpper knappen, slocknar lampan.

(NED) Nederland

HOE TE BEDIENEN

Klik zachtjes op de staartschakelaar om een laag lichtrendement te produceren of druk hard op de staartschakelaar om een hoog lichtrendement te produceren.

Eén keer klikken (snel klikken en loslaten) op de staartschakelaar om de zaklamp in of uit te schakelen.

Als u de schakelaar ingedrukt houdt, bevindt de zaklamp zich in tijdelijke modus; als u de staartschakelaar loslaat, wordt deze uitgeschakeld.

(PL) Polska

INSTRUKCJA UŻYTKOWANIA:

lekkie wciśnięcie tylnego przycisku spowoduje uruchomienie latarki w trybie najniższym. Mocne wciśnięcie tylnego przycisku spowoduje włączenie trybu najwyższego.

Pojedyncze wciśnięcie tylnego przycisku spowoduje włączenie lub wyłączenie latarki.

Wciśnięcie i przytrzymanie tylnego przycisku spowoduje chwilowe włączenie, puszczenie przycisku wyłączy latarkę.

(DE) Deutsch

BEDIENUNG

Durch leichtes Drücken des Endkappenschalters erhält man eine niedrige Lichtleistung, durch festeres Drücken des Endkappenschalters erhält man eine hohe Lichtleistung.

Durch einmaliges Drücken des Endkappenschalters (schnelles Klicken und Loslassen) wird die Taschenlampe an- oder ausgeschaltet.

Wenn Sie den Endkappenschalter gedrückt halten, leuchtet die Taschenlampe im Momentary Modus; Wenn Sie den Endkappenschalter loslassen, wird die Taschenlampe ausgeschaltet.

(HU) Magyarország

A HASZNÁLAT MÓDJA

Nyomja meg finoman a hátsó zárókupakon lévő kapcsolót az alacsony fényerőfokozat üzemmód kapcsolásához. A lámpa erős fényerőfokozatra kapcsolásához nyomja be teljesen a hátsó zárókupakon lévő kapcsolót.

A hátsó zárókupakon lévő kapcsoló gyors teljes benyomásával és felengedésével a lámpa bekapcsolható, illetve kikapcsolható.

A kapcsoló benyomásának és nyomva tartásának idejére a lámpa

bekapcsol, majd a kapcsoló felengedésekor kikapcsol.

(RU) Русский

Инструкция

Легкое нажатие активирует режим 300 люмен, полное нажатие активирует режим 2250 люмен.

Для вкл/выкл фонаря необходимо быстро нажать и отпустить торцевую кнопку.

Если нажать и удерживать кнопку, фонарь будет гореть до тех пор, пока Вы ее не отпустите.

(ES) Español

CÓMO OPERAR

Pulse suavemente el interruptor remoto para producir poca luz de salida o pulse fuerte el interruptor remoto para producir mucha luz de salida.

Un Sólo Clic (pulse brevemente) el interruptor remoto para encender o apagar la linterna.

Cuando mantiene pulsado el interruptor, la linterna estará en modo momentáneo; Cuando suelta el interruptor remoto, se apaga.

(RO) Romanesc

MOD DE OPERARE:

Apasati butonul usor pentru a porni in modul mic sau apasati butonul ferm (tare) pentru a porni modul maxim.

Apasare normala (apasati scurt apoi eliberati) pentru a porni sau opri lanterna.

Atunci cand apasati şi mentineti apasat butonul, lanterna va intra în mod iluminare momentan; la eliberarea butonului din spate lanterna se va stinge.

(UA) Ukrainian

Як працює:

Легке натискання на торцеву кнопку вмикає економний режим яскравості; сильніше натискання переводить ліхтарик у стандартний режим світіння.

Одне швидке натискання кнопки (натисніть і одразу відпустіть) вмикає і вимикає ліхтарик.

Якщо натиснути і так утримувати кнопку, ліхтарик світитиме, і вимкнеться, якщо кнопку відпустити.

(JP) 日本語

使用方法

テールスイッチを軽く押すとLowモードで常時点灯。強く押すとHighモードで点灯します。

テールスイッチをシングルクリック（クリックして素早く離す）するとライトが点灯・消灯します。

テールスイッチを長押すと（指はスイッチから離しないまま）ライトが点灯します、スイッチを離すと消灯します。

(TH) ไทย

ไฟฉาย Warrior X Pro **มีโหมดต่าง ๆ**

อยู่หลายโหมดซึ่งสามารถกำหนดได้โดยการกดสวิทช์ท้ายหนักหรือเบา

สำหรับการเปิดปิดไฟฉาย ทำได้โดยการกดสวิทช์ท้ายแล้วปล่อย ไฟฉายจะเปิด ทำอีกครั้งเพื่อปิดไฟฉาย

ส่วนการเปิดหรือปิดชั่วคราว ได้โดยการกดสวิทช์ท้ายครึ่งนึงค้างไว้ ไฟฉายจะติด และไฟฉายจะดับเมื่อปล่อยสวิทช์ท้าย

(FR) Français

COMMENT L'UTILISER

Presser légèrement le bouton arrière pour activer le niveau de sortie faible ou presser plus fort pour activer le mode fort.

Un simple clic (presser et relâcher rapidement) allume et éteint la lampe.

Lorsque vous pressez et maintenez le bouton, la lampe s'active momentanément ; lorsque vous relâchez le bouton la lampe s'éteint.

(BG) български

Начин на работа

Леко задействане на бутона за слаб режим и пълно задействане за силен режим.

Единичен бърз клик – включване/изключване.

Задействане и задържане на бутона за моментно задействане. При отпускане на бутона фенера се изключва.

(IT) Italia

FUNZIONAMENTO

Premere leggermente l'interruttore posteriore per produrre un'emissione di luce bassa o premere con forza l'interruttore posteriore per produrre un'elevata emissione di luce.

Con un solo clic (fare clic e rilasciare rapidamente) l'interruttore posteriore per accendere o spegnere la torcia elettrica.

Quando si tiene premuto l'interruttore, la torcia si trova in modalità momentanea; quando si rilascia l'interruttore, si spegne.

(SK) Slovenskýjazyk

AKO POUŽÍVAŤ

Ľahko stlačte spínač koncovky, aby ste dosiahli slabý svetelný výkon, alebo stlačte silnejšie koncový spínač, aby ste dosiahli vysoký svetelný výkon.

Jedným kliknutím (rýchlym kliknutím a uvoľnením) koncovým spínačom zapnite alebo vypnite svietidlo.

Keď stlačíte a podržíte spínač, svietidlo bude vo chvíľkovom režime; pri uvoľnení koncového spínača sa vypne.

EU-DECLARATION OF CONFORMITY

EU-Declaration of Conformity can be found here CE: https://olightworld.com/ec-declaration

WARRANTY

Within 30 days of purchase: Contact the original seller for repair or replacement.

Within 5 years of purchase: Contact Olight for repair or replacement.

Battery warranty: Olight offers a one year warranty for all rechargeable batteries.

MCC magnetic USB charging cable: One year.

The other no warranty fragile or low-value fittings like lanyard and clip, you can contact post-sale in 30 days after purchase if it has quality drawback or damage under normal use condition. Over 30 days or damage under abnormal use condition, the conditional quality assurance will be provided as appropriate.

USA Customer Support
cs@olightstore.com
Global Customer Support
customer-service@olightworld.com

Visit **www.olightworld.com** to see our complete product line of portable illumination tools.

OLIGHT

Olight Technology Co., Limited
5th Floor, Building A2, Fuhai Information Harbor, Fuhai Subdistrict, Bao'an District, Shenzhen, China 518103
Made in China

3.0040.6010.9002
D. 03. 18. 2020

THANK YOU!